GaN/SiC Bare Die Power HEMT

DC-15 GHz

AM050WN-00-R

April 2015

Rev 2

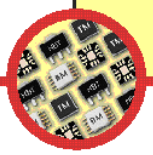

DESCRIPTION

AMCOM's AM050WN-00-R is a discrete GaN/SiC HEMT that has a total gate width of 5mm (Four 1.25mm FETs in parallel). It is a bare die which can be operated up to 15 GHz. It can provide a typically saturated power of 43.3 dBm. This part is RoHS compliant.

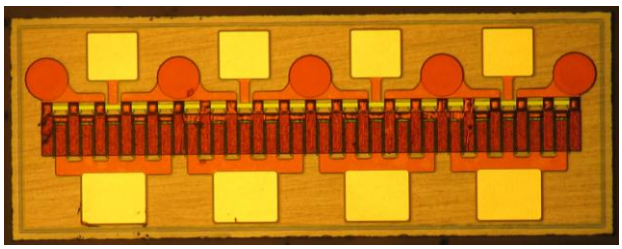

FEATURES

- High Frequency Operation up to 15GHz
- Gain=20dB at 2GHz
- PAE=51%
- P_{5dB}=43.3 dBm

APPLICATIONS

- Cellular Radio Base Stations
- WLAN, Repeaters
- C-Band VSAT
- Radar
- Test Instrumentation
- Military

TYPICAL RF PERFORMANCE (CW)

FREQUENCY	2 (GHz)	10 (GHz)
P_{5dB} (dBm)	43.3	42.9
PAE @ P_{5dB}	51%	41%
Small Signal Gain (dB)	20	11
Load Reflection Coeff. (Per 1.25mm cell)	0.19∠101°	0.61∠141°

*(V_{ds} =28V, I_{ds} = 750mA)

**Bond wires are not included and the reference line is 75 microns from the edge of the bonding pads towards the device.

ABSOLUTE MAXIMUM RATING

Parameters	Symbol	Rating
Drain-Source Voltage (V)	V_{ds}	40
Gate-Source Voltage (V)	V_{gs}	-6
Drain Current (mA)	I_{ds}	2000
Continuous Dissipation At Room Temp. (W)	P_t	82.9
Operating Temp. (^oC)	T_A	-55 to +85
Max. Channel Temp. (^oC)	T_{ch}	+200

DC PARAMETERS

Parameters	Conditions	MIN	TYP	MAX
Saturation Current I_{dss} (mA)	V_{ds}=10V, V_{gs} =0V	2500	4000	5700
Pinch-off Voltage V_p (V)	V_{ds}=10V, I_{ds} =2.5% I_{dss}	-3.9	-2.9	-1.9
Drain to Gate Breakdown Voltage BV_{gd} (V)	I_{dg} = 1 mA/mm	90	120	-
Thermal Resistance ($^oC/W$)		-	2.11	-

E-mail: info@amcomusa.com
http://www.amcomusa.com

Tel. (301) 353-8400 Fax. (301) 353-8401
401 Professional Drive, Gaithersburg, MD 20879

SMALL SIGNAL MEASUREMENTS *

S-Parameters for AM050WN-00-R. V_{ds} =28V, V_{gs} = -2.35V, I_{ds} = 750mA

Freq(GHz)	MAG(S11)	ANG(S11)	MAG(S21)	ANG(S21)	MAG(S12)	ANG(S12)	MAG(S22)	ANG(S22)
0.01	0.996	-5.118	46.229	172.39	0.001	84.253	0.171	-157.89
0.1	0.97	-48.11	41.54	152.01	0.007	64.346	0.301	-143.64
0.5	0.91	-131.55	17.986	107.2	0.016	21.75	0.569	-161.29
1	0.905	-154.45	9.527	91.416	0.017	8.79	0.609	-166.93
1.5	0.907	-162.61	6.365	82.726	0.017	2.985	0.626	-167.78
2	0.909	-166.73	4.724	76.073	0.016	-0.687	0.643	-167.51
2.5	0.913	-169.22	3.715	70.353	0.016	-3.292	0.661	-166.97
3	0.916	-170.91	3.029	65.202	0.015	-5.155	0.679	-166.47
3.5	0.92	-172.16	2.532	60.467	0.015	-6.381	0.699	-166.09
4	0.924	-173.14	2.155	56.074	0.014	-6.993	0.718	-165.88
4.5	0.927	-173.95	1.859	51.979	0.013	-6.971	0.737	-165.82
5	0.931	-174.65	1.622	48.153	0.012	-6.276	0.755	-165.89
5.5	0.934	-175.27	1.427	44.575	0.011	-4.858	0.772	-166.07
6	0.938	-175.84	1.266	41.225	0.011	-2.66	0.788	-166.33
6.5	0.941	-176.37	1.13	38.086	0.01	0.364	0.802	-166.65
7	0.943	-176.86	1.015	35.143	0.009	4.236	0.816	-167.02
7.5	0.946	-177.34	0.916	32.381	0.009	8.928	0.828	-167.43
8	0.948	-177.79	0.831	29.788	0.009	14.334	0.839	-167.85
8.5	0.95	-178.22	0.757	27.35	0.008	20.265	0.849	-168.28
9	0.952	-178.64	0.693	25.056	0.008	26.454	0.859	-168.72
9.5	0.954	-179.05	0.636	22.897	0.008	32.606	0.867	-169.15
10	0.956	-179.45	0.586	20.862	0.009	38.453	0.875	-169.59
10.5	0.957	-179.84	0.542	18.944	0.009	43.805	0.882	-170.02
11	0.959	179.78	0.502	17.134	0.01	48.561	0.888	-170.44
11.5	0.96	179.4	0.467	15.426	0.01	52.696	0.894	-170.84
12	0.961	179.04	0.435	13.814	0.011	56.238	0.899	-171.24
12.5	0.962	178.67	0.407	12.291	0.012	59.243	0.904	-171.63
13	0.963	178.31	0.381	10.855	0.012	61.781	0.908	-172.01
13.5	0.963	177.96	0.358	9.499	0.013	63.917	0.912	-172.38
14	0.964	177.61	0.337	8.22	0.014	65.713	0.915	-172.74
14.5	0.964	177.26	0.318	7.015	0.015	67.225	0.919	-173.09
15	0.965	176.91	0.3	5.88	0.016	68.499	0.922	-173.42
15.5	0.965	176.56	0.284	4.814	0.017	69.575	0.925	-173.75
16	0.966	176.22	0.269	3.813	0.018	70.485	0.927	-174.07
16.5	0.966	175.87	0.255	2.876	0.019	71.257	0.93	-174.38
17	0.966	175.53	0.243	2.002	0.02	71.914	0.932	-174.69
17.5	0.966	175.18	0.231	1.189	0.021	72.475	0.934	-174.98
18	0.966	174.84	0.221	0.435	0.022	72.956	0.936	-175.27

*Notes:

1) Bond wires are not included and the reference line is 75 microns from the edge of the bonding pads towards the device.
2) S2P file downloadable from the web : http://www.amcomusa.com/products/rftrans.html

MAXIMUM AVAILABLE GAIN (Gmax) 28V/750 mA

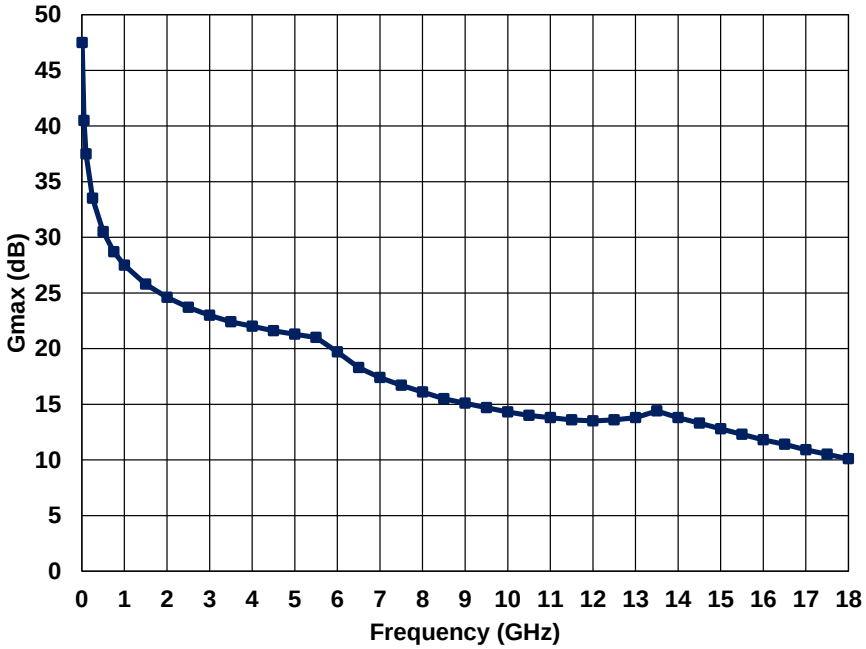

POWER DATA (CW)

1) Optimum P_{SAT} tune (V_{ds} =28V, I_{ds} = 750mA) *

Frequency	SOURCE Γ (per 1.25 mm cell)	LOAD Γ (per 1.25 mm cell)	Gain (dB)	P_{1dB} (dBm)	P_{5dB} (dBm)	PAE @ P_{5dB}
2 GHz	0.8∠101°	0.19∠101°	20	41.7	43.3	51%
4 GHz	0.8∠131°	0.36∠113°	17	40.6	43.1	49%
6 GHz	0.81∠141°	0.44∠125°	13.5	40.1	43.1	46%
8 GHz	0.8∠165°	0.54∠138°	13	39.8	43	44%
10 GHz	0.75∠170°	0.61∠141°	11	38.8	42.9	41%

*Notes:

1) Source tuning has effect on P_{1dB} & small signal gain, and the source points in this table is a compromise between high gain and high P_{1dB} at that frequency.
2) Bond wires are not included and the reference line is 75 microns from the edge of the bonding pads towards the device.
3) AM050WN-00-R is 5mm device which consists of four 1.25mm cells in parallel.

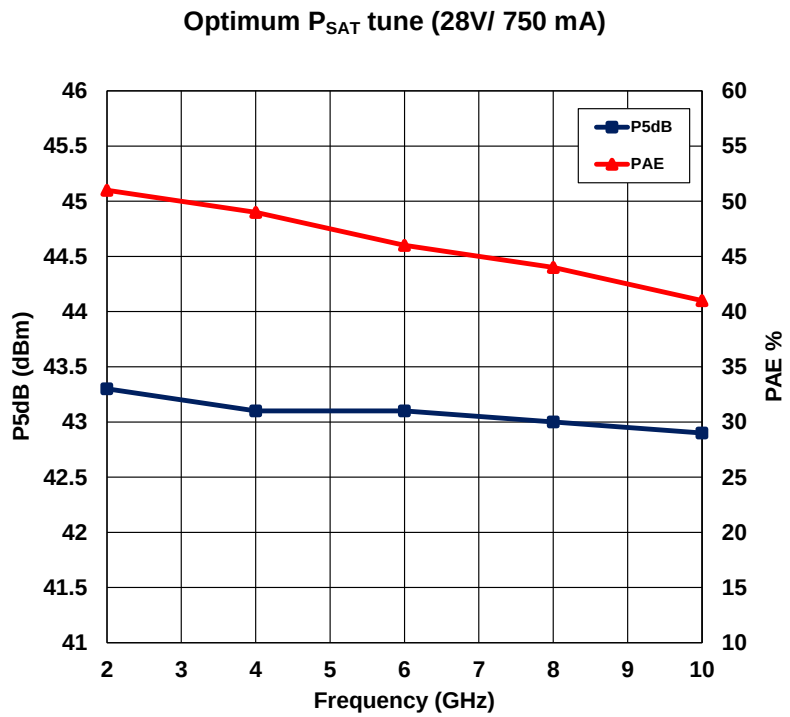

2) Optimum PAE tune (V_{ds} =28V, I_{ds} = 750mA) *

Frequency	SOURCE Γ (per 1.25 mm cell)	LOAD Γ (per 1.25 mm cell)	Gain (dB)	P_{1dB} (dBm)	P_{5dB} (dBm)	PAE @ P_{5dB}
2 GHz	0.8∠101°	0.54∠67°	21	40.9	42.1	58%
4 GHz	0.8∠131°	0.63∠92°	16	39.6	41.8	54%
6 GHz	0.81∠141°	0.65∠108°	13	39.5	42.2	50%
8 GHz	0.8∠165°	0.7∠131°	13	39.1	42	47%
10 GHz	0.75∠170°	0.72∠134°	12	38.8	42.3	42%

*Notes:

1) Source tuning has effect on P_{1dB} & small signal gain, and the source points in this table is a compromise between high gain and high P_{1dB} at that frequency.
2) Bond wires are not included and the reference line is 75 microns from the edge of the bonding pads towards the device.
3) AM050WN-00-R is 5mm device which consists of four 1.25mm cells in parallel.

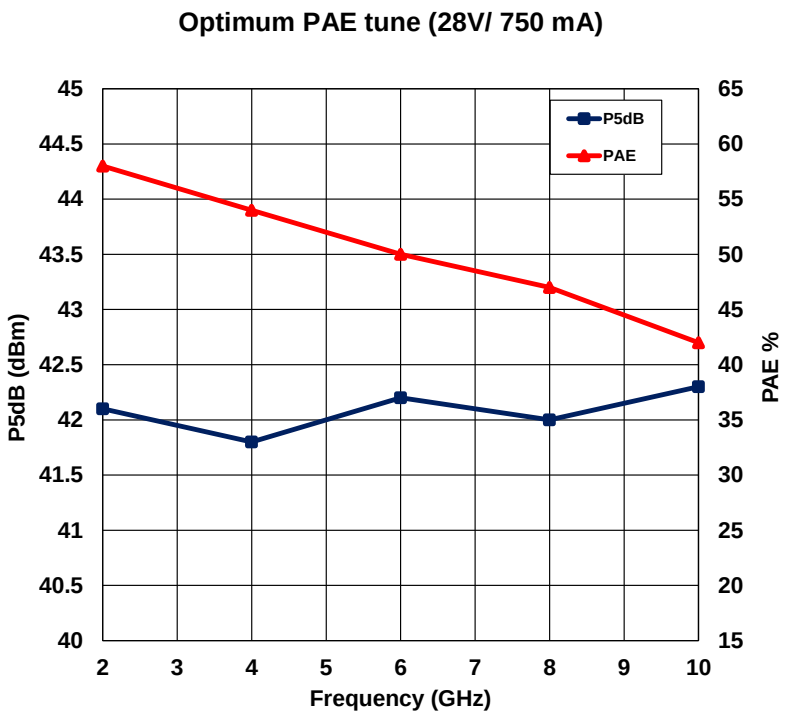

CHIP OUTLINE

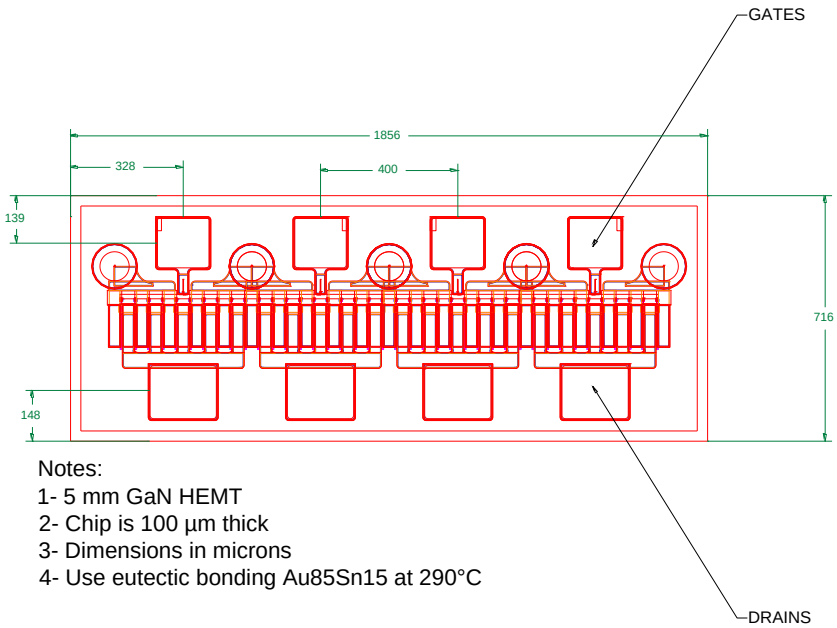

Notes:
1- 5 mm GaN HEMT
2- Chip is 100 µm thick
3- Dimensions in microns
4- Use eutectic bonding Au85Sn15 at 290°C

TEST CIRCUIT

A) 2 GHz to 3 GHz

28V/750mA

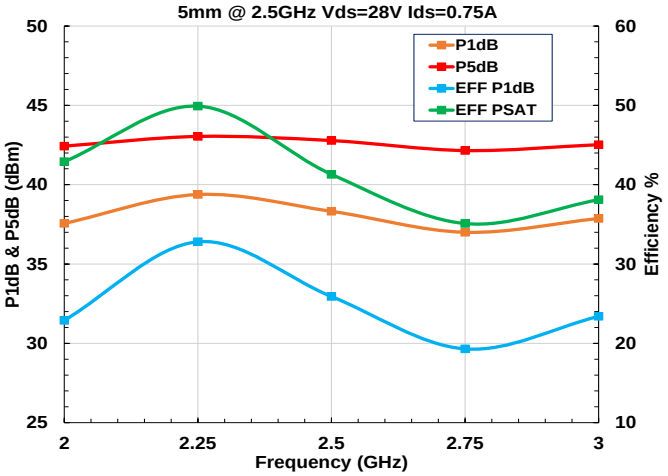

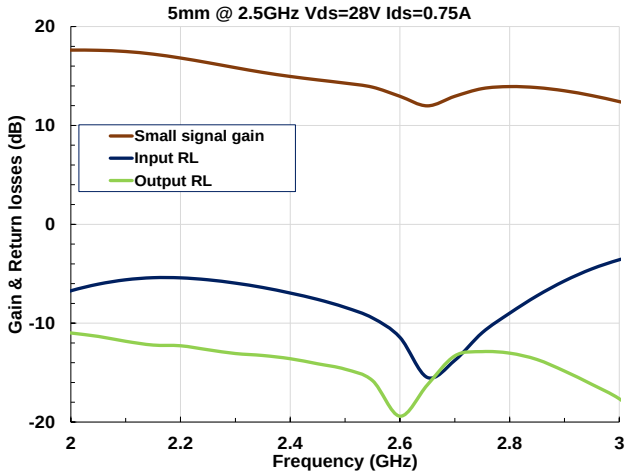

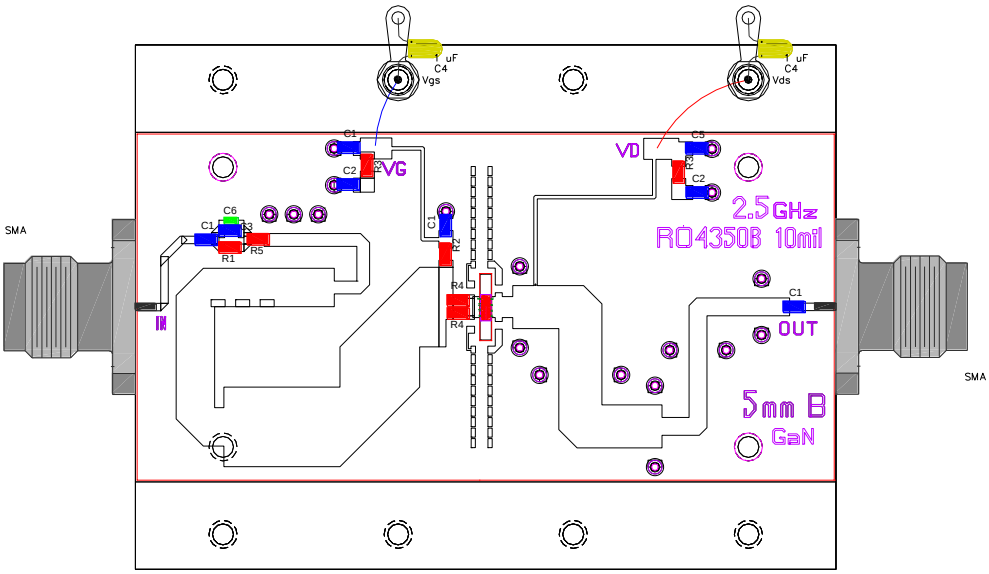

Notes:

1- 10mils Rogers 4350 Material (LoPro)
2- Ckt is for 5mm mask71 @ 2.5GHz
3- C1=100pF, C2=1000pF, C3=2.2pF, C4=1uF, C5=47pF, C6=1pF
R1=10ohms, R2=470ohms, R3=22ohms, R4=3ohms, R5=0 ohm
4- C1,C2,C3,C5 & all Resistors are 0603 size
5- C6 is 0402 size.

B) 6.6 GHz to 7.8 GHz

28V/750mA

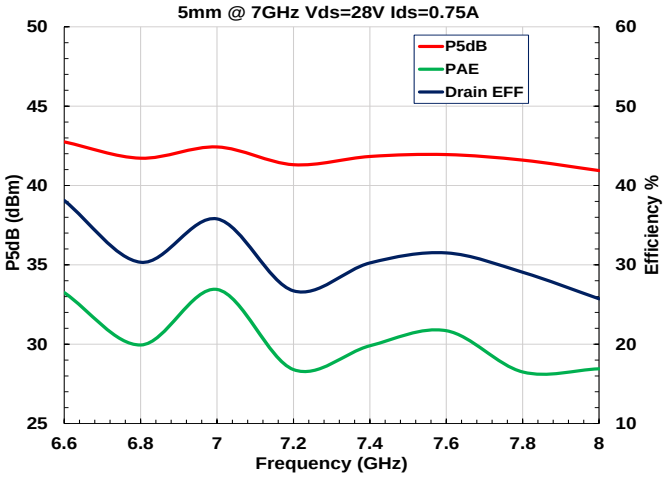

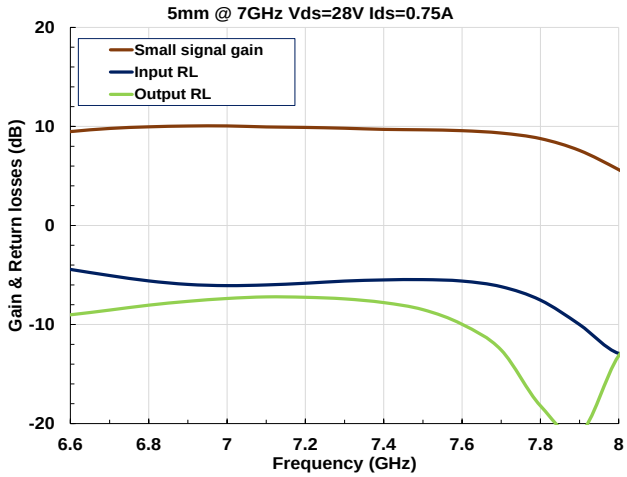

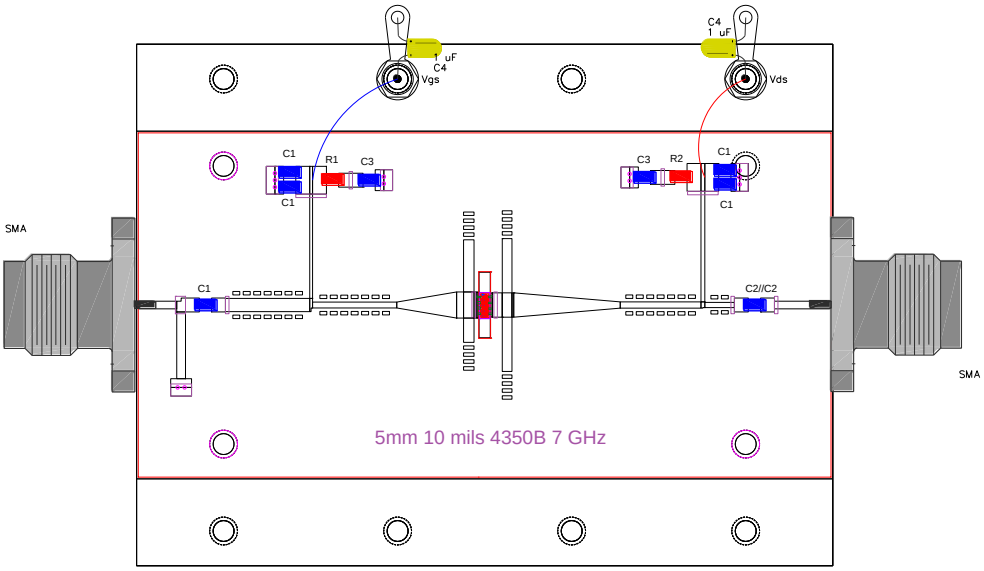

Notes:
1- 10mils Rogers 4350 Material (LoPro)
2- Ckt is for 5mm mask71 @ 7GHz
3- C1=1pF, C2=10pF, C3=1000pF, C4=1uF
R1=100ohm, R2=10ohms
4- All Caps & Resistors are 0603 size